Scania Infotainment Premium

SCANIA
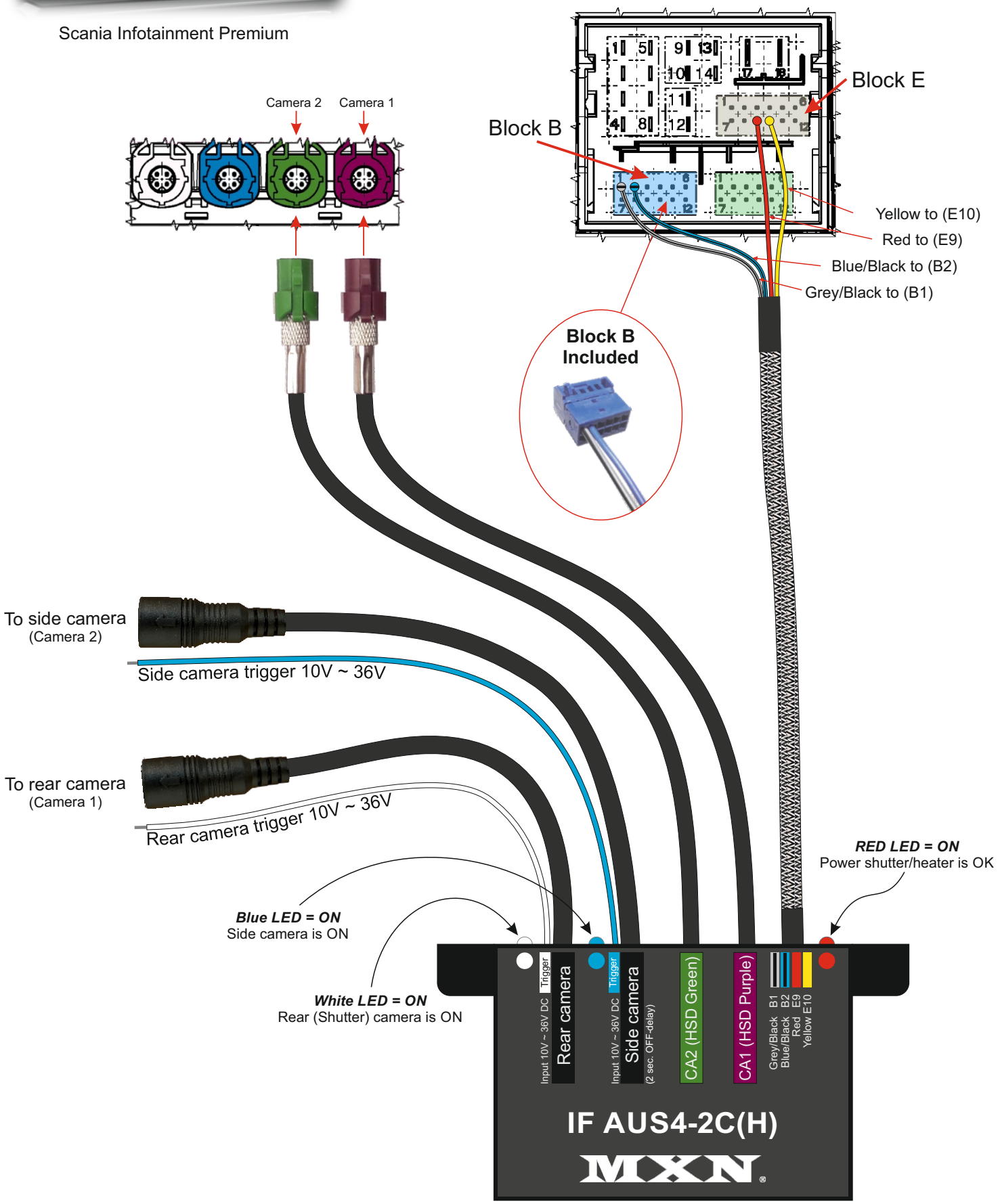
Camera interface wiring diagram